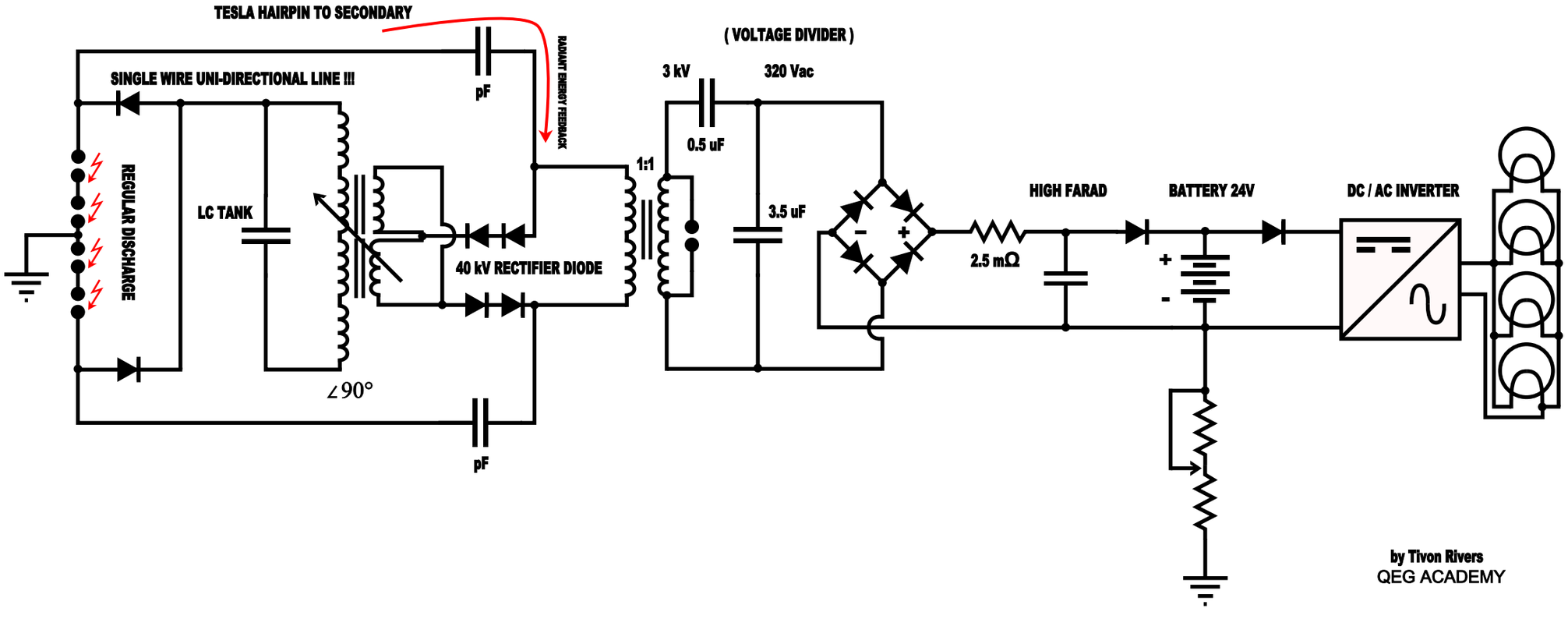QEG SYSTEM CONVERSION CIRCUIT SCHEMATIC